EXPERIMENT 3

AIM:

To detect γ radiation produced by ^{137}Cs with a scintillator counter using a single channel analyser.

- Energy spectrum is obtained and analysed.
- Resolution of the SCA instrument is measured.

SOURCE:

γ-ray source used in this experiment is ^{137}Cs (1 peak)

THEORY:

1) β^- decay:

- β^- decay occurs as follows:

$$n \longrightarrow p + e^- + \bar{\nu}_e$$

n – neutron
p – proton
e^- - electron (called the β particle)
$\bar{\nu}_e$ – antineutrino

- The mass number (p + n) remains the same whereas the atomic number (p) increases.
- e^- and $\bar{\nu}_e$ are released to conserve charge, energy and momentum. They carry away the energy and momentum.

2) Decay of ^{137}Cs:

- ^{137}Cs (Z = 55) decays into ^{137m}Ba (Z = 56) (m – metastable, meaning it is not the most stable nuclear state) through β^- decay.
- The β^- decay energy spectrum is a continuous spectrum since the energy emitted in the decay is shared between the antineutrino and the e^-.

- The β particle (e^-) can have a maximum energy of 512 keV, when the antineutrino has almost 0 energy.
- ^{137m}Ba releases a gamma photon, having a characteristic energy of 662 keV to reach its ground state. This is what is detected by the scintillator counter as the peak of the ^{137}Cs distribution.

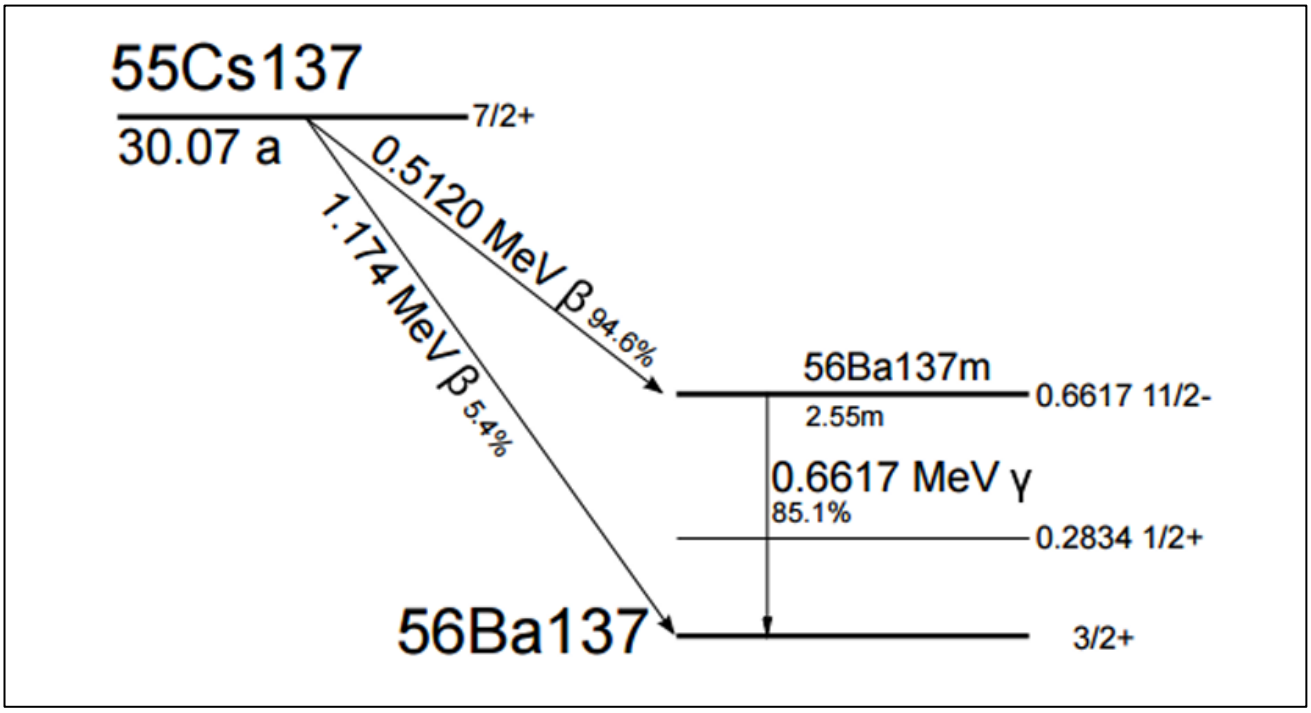

Figure 1: Decay scheme of Cs-137

3) Detection by scintillator counter:

- The counter has scintillator crystals (like NaI(Tl)). When the γ-ray emitted (662 keV) enters the crystal, it can lose its energy by the following processes:

    1. Photoelectric Effect: γ photon absorbed, e^- ejected.
    2. Compton Scattering: γ photon scatters, e^- gets energy.
    3. Pair Production: If energy > 1.022 MeV, not relevant here.

    In all the cases, the γ-ray energy is transferred to fast-moving e^-s.

- The energetic electrons collide with other atoms of the crystal, exciting them. In pure NaI, these would have mostly returned to the ground state without producing visible light.
- This is why Thallium (Tl) is added as an activator. Excited e^-s transfer their energy to Tl^+ ions, which then return to ground state, emitting visible light photons ($\lambda \sim 410$ nm)
- This "scintillation" is efficient and gives a burst of light proportional to the γ-ray's energy.

4) Photomultiplier Tube (PMT):

- The PMT has a photocathode coating. When it is hit by scintillation light, it knocks out photoelectrons by the photoelectric effect. The following is valid:

$$\textit{No. of emitted } e^- \propto \textit{No. of photons} \propto \textit{Energy of the } \gamma\textit{-ray}$$

- These electrons are directed towards a series of electrodes (dynodes), each at a higher positive voltage than the previous one.
- When an e^- strikes the 1st dynode, it ejects several secondary e^-s. Each secondary e^- is accelerated to the next dynode, producing more electrons at each stage. After 10-12 dynodes, the initial few electrons are multiplied into millions.
- This large cloud of electrons reaches the anode, producing a measurable current pulse. The pulse height is proportional to the original number of scintillation photons, which is proportional to the γ-ray's energy.
- If there are 10 dynodes, each at 50 V higher than the previous one, then total voltage gap:

$$V_{Total} = (50 \times 100)\ V = 500\ V$$

This is called the PMT Voltage or HV (High Voltage).

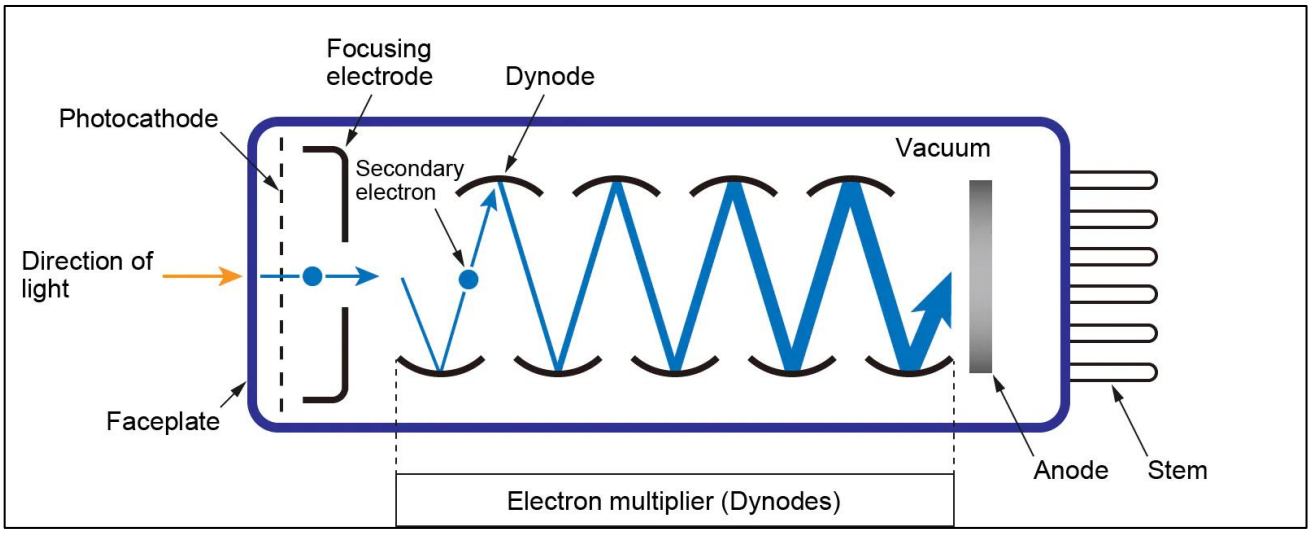

Figure 2: Structure of PMT

5) Single Channel Analyser (SCA):

- The scintillator + PMT produce pulses of varying amplitudes (heights).
- The SCA selects pulses only in a certain energy range by setting 2 limits:

1. A lower discriminator (Baseline)
2. An upper discriminator (Baseline + Window)

- Baseline (Low Level Discriminator (LLD)) is the minimum acceptable pulse height. Pulses smaller than this are rejected.
- The window defines the range of pulse heights above the baseline that will be accepted.
- For example, if:
  1. Baseline = 600 keV
  2. Window = 50 keV,

  The SCA will only accept pulses between 600 and 650 keV. This is to select the 662 keV γ-peak of ^{137}Cs, while rejecting Compton background.

5) Compton Scattering:

- In this case, the γ-ray is not absorbed but scattered through an angle θ by the electron, which recoils and carries away some of the energy of the gamma ray.
- The scattered electron energy is detected by the PMT. The gamma-ray escapes from the scintillator as the probability that a gamma-ray Compton scatters in the scintillator is quite small.
- The equation for energy of scattered electron is:

$$E' = \frac{\frac{E^2}{mc^2}(1-\cos\theta)}{1+\frac{E}{mc^2}(1-\cos\theta)}$$

E = energy of gamma-ray
E' = energy of scattered electron
θ = angle of scattering
m = mass of electron
c = speed of light

- *At $\theta = 0^o$:* **E' = 0** (minimum energy of electron).
  At $\theta = 180^o$: **E' =** $\boldsymbol{\frac{2E^2}{mc^2+2E}}$ (maximum energy of electron). This maximum energy is called the **Compton edge**. For E = 662 keV, it is around 478 keV.

  The energy of the electron lies in this range.

6) Energy Spectrum of Cs-137:

The energy spectrum of ^{137}Cs has the following features:

- **Photo-peak (662 keV):** This is the main γ-line of ^{137}Cs. It occurs when the γ-ray is fully absorbed in the detector, usually by the photo-electric effect. All the γ-energy is transferred to 1 single electron which produces a single peak.
- **Compton continuum & Compton Edge:** When a γ-photon undergoes Compton scattering, it transfers only part of its energy to an electron. This creates a broad continuum. The Compton edge is the maximum energy transfer possible in a single Compton event **(478 keV)**
- **Back-scattering peak:** Some γ-rays scatter by 180° before re-entering the detector. The back-scattered γ-photon has an energy of about **184 keV**. Hence the detector registers a small peak at that energy.
- **Ba X-rays:** The β^- emission (and subsequent processes) can produce characteristic X-rays of Barium **(30-35 keV)**. They appear as small peaks at low energy in the spectrum.

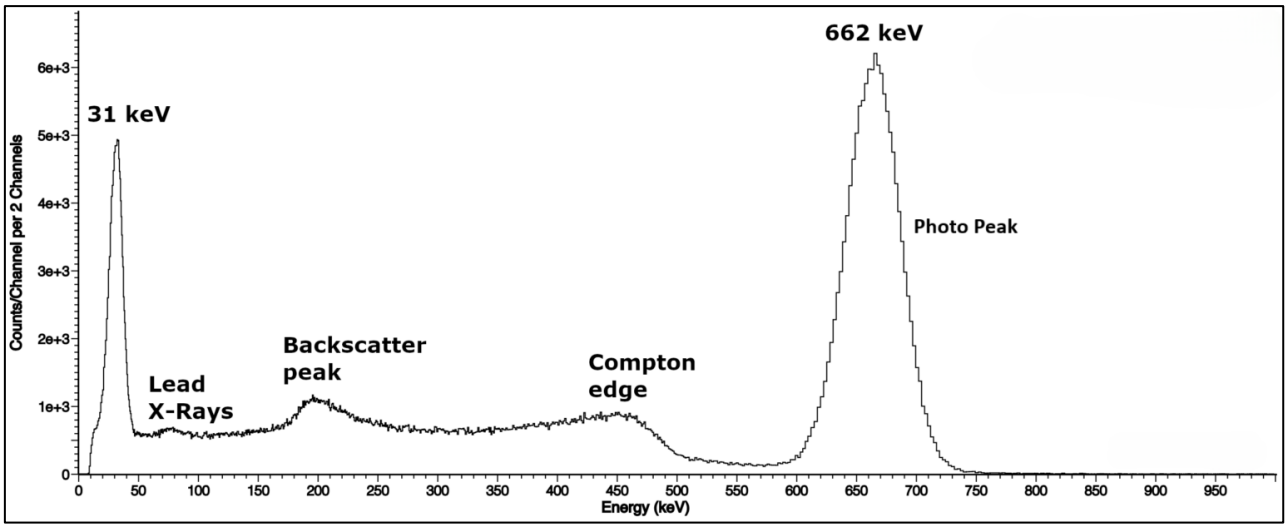

Figure 3: Energy Spectrum of Cs-137

OBSERVATIONS:

HV Adjust: 600 V

Window: 0.1 V

Mode: Window (WIN)

Amplitude/Gain: 2.64

Source: ^{137}Cs

Table 1: Variation of counts with Baseline

BASELINE (V)	RUN 1	RUN 2	AVERAGE (COUNT FOR 30S)
0.5	439	467	453
0.54	1353	1363	1358
0.58	2159	2139	2149
0.62	2215	2183	2199
0.66	2208	2258	2233
0.7	2343	2271	2307
0.74	2258	2213	2235.5
0.78	2644	2639	2641.5
0.82	3015	3104	3059.5
0.86	3313	3298	3305.5
0.9	2995	3148	3071.5
0.94	2826	2808	2817
0.98	2514	2678	2596
1.02	2427	2409	2418
1.06	2146	2264	2205
1.1	2160	2079	2119.5
1.14	2109	1998	2053.5
1.18	2065	1973	2019
1.22	1868	1969	1918.5
1.26	1849	1847	1848
1.3	1908	1967	1937.5
1.34	1876	1897	1886.5
1.38	1807	1864	1835.5
1.42	1894	1962	1928

1.46	1759	1983	1871
1.5	1795	1807	1801
1.54	1892	1878	1885
1.58	1797	1841	1819
1.62	1578	1653	1615.5
1.66	1298	1245	1271.5
1.7	878	838	858
1.74	682	668	675
1.78	523	537	530
1.82	415	469	442
1.86	365	372	368.5
1.9	350	358	354
1.94	292	289	290.5
1.98	354	342	348
2.02	437	431	434
2.06	864	915	889.5
2.1	1861	1985	1923
2.14	4959	4934	4946.5
2.18	9120	8957	9038.5
2.22	11952	11928	11940
2.26	11603	11647	11625
2.3	7904	7953	7928.5
2.34	3767	3717	3742
2.38	1381	1343	1362
2.42	459	439	449
2.46	184	164	174
2.5	177	147	162

2.54	135	123	129
2.58	102	135	118.5
2.62	104	96	100
2.66	94	89	91.5
2.7	83	98	90.5

CALCULATIONS:

The gamma spectrum of Cs-137 (Counts v/s Baseline (V)) is plotted below (Figure 4).

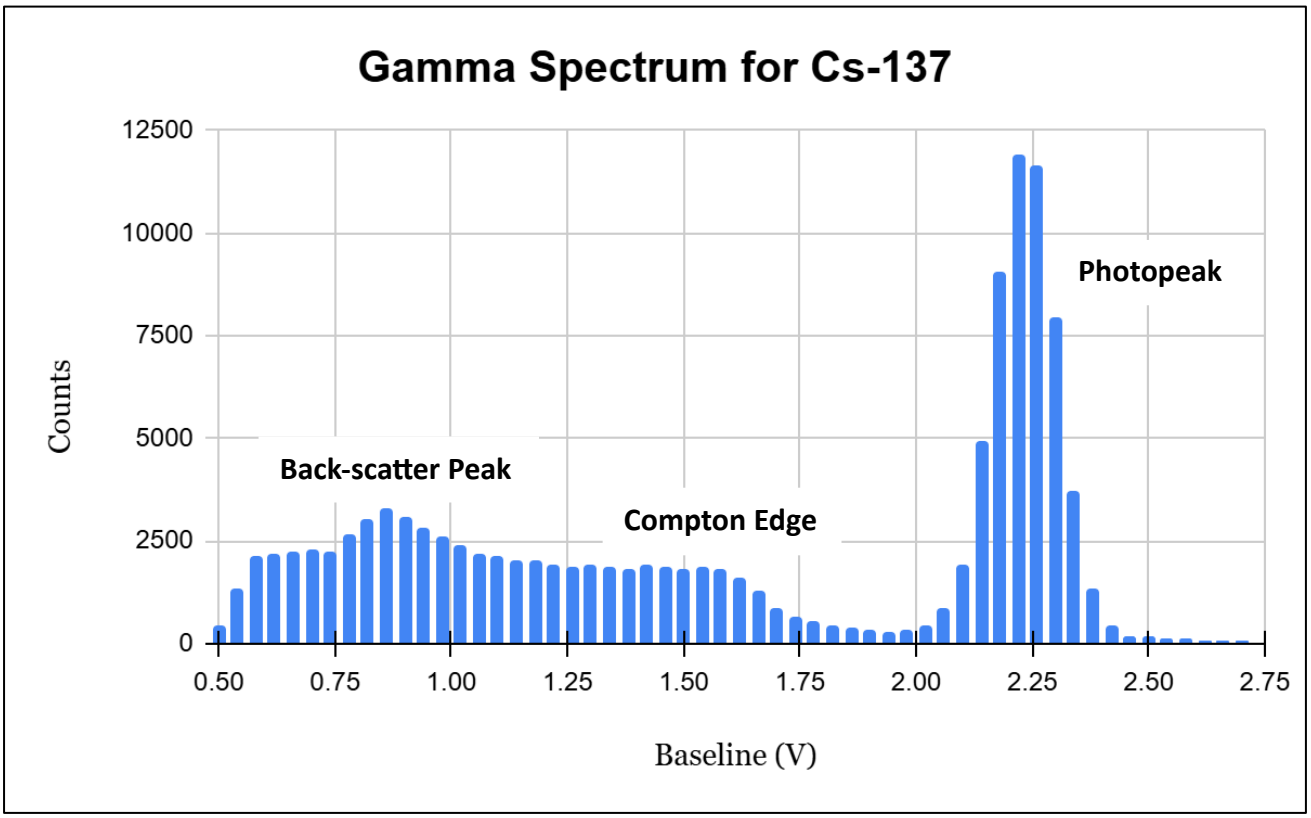

Figure 4: Plot of Counts v/s Baseline (V)

As can be seen, the photo-peak appears near 2.25 V. Taking the points near the photo-peak and fitting them with a Gaussian function, the Baseline voltage at which the peak appears is **2.23 V**. The Gaussian fit of the points near the peak is plotted in Figure 5. From the plot:

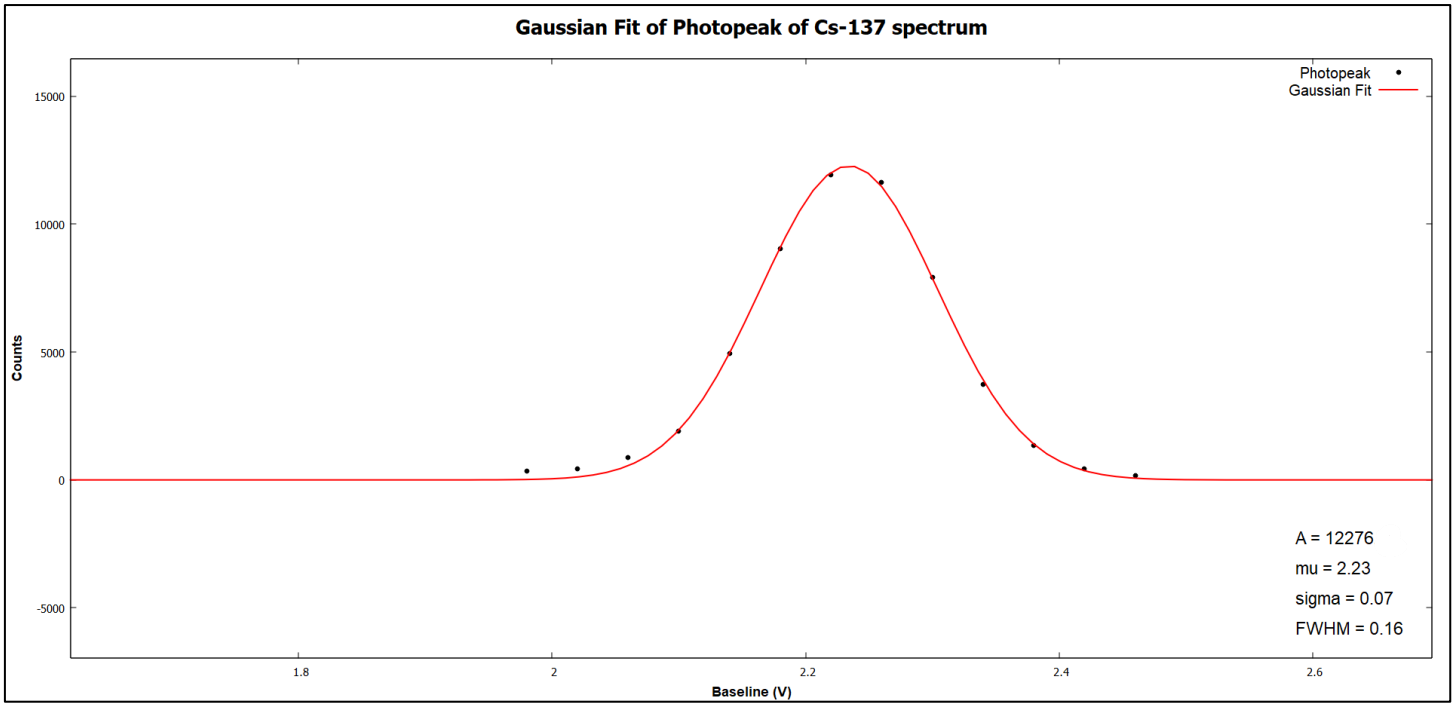

Figure 5: Gaussian Fit of Photopeak

From the plot:

$$Amplitude\ (A) = 12276 \text{ (maximum counts)}$$

$$\mu = 2.23\ V$$

$$\sigma = 0.07\ V$$

$$FWHM = 2\sqrt{2}\sigma = 0.16\ V$$

The peak for Cs-137 occurs at 662 keV. In the graph, this occurs at 2.23 V. Thus, to convert from baseline voltage (V) to energy (keV), the calibration is:

$$\boldsymbol{E = \frac{662}{2.23} \times V_B}$$

E = energy in keV

V_B = baseline voltage in volts

Compton Edge:

According to theoretical calculations, the Compton Edge occurs at 478 keV.

$$V_B = \frac{2.23}{662} \times 478 = \mathbf{1.61\ V}$$

Back-scatter Peak:

The energy of the scattered gamma-ray in Compton scattering is:

$$E'_\gamma = \frac{E}{1 + \frac{E}{mc^2}(1 - cos\,\theta)}$$

E'_γ = Energy of scattered gamma-ray

E = energy of gamma-ray

For E = 662 keV, θ = 180° (back-scattering), $\boldsymbol{E'_\gamma}$ **= 184 keV**

$$V_B = \frac{2.23}{662} \times 184 = \mathbf{0.62\ V}$$

Resolution of SCA:

The resolution can be determined using the formula:

$$R = \frac{\delta E}{E} \times 100\ \%$$

R = resolution

δE = Full width at half-maximum (FWHM)

E = Energy of photo-peak

Since $\frac{\delta V}{V} = \frac{\delta E}{E}$:

$$R = \frac{0.16}{2.23} \times 100 = \mathbf{7.17}\ \%$$

SOURCES OF ERROR:

- **Statistical Error:** Radioactive decay is a random process. The number of counts in a fixed time interval varies. The uncertainty is proportional to $\sqrt{N}$.
- **Instrumental Errors:** Not all gamma-rays are fully absorbed in the scintillator. Some may escape, affecting photo-peak intensity. Low-energy pulses from background may be miscounted.
- **Background Radiation:** Cosmic rays, environmental radioactivity or nearby sources can add extra counts, shifting the photo-peak. It can be corrected by measuring background separately.
- **Data Processing:** Incorrect calibration, poor binning of data for histogram preparation or fitting errors can distort the parameters (A, μ, σ) of the spectrum.

CONCLUSION:

- The photo-peak appears at 2.23 V.
- The FWHM of the photo-peak is 0.16 V.
- The Compton Edge appears at 1.61 V.
- The back-scatter peak appears at 0.62 V.
- The resolution of the instrument is 7.17%.